GEMÜ

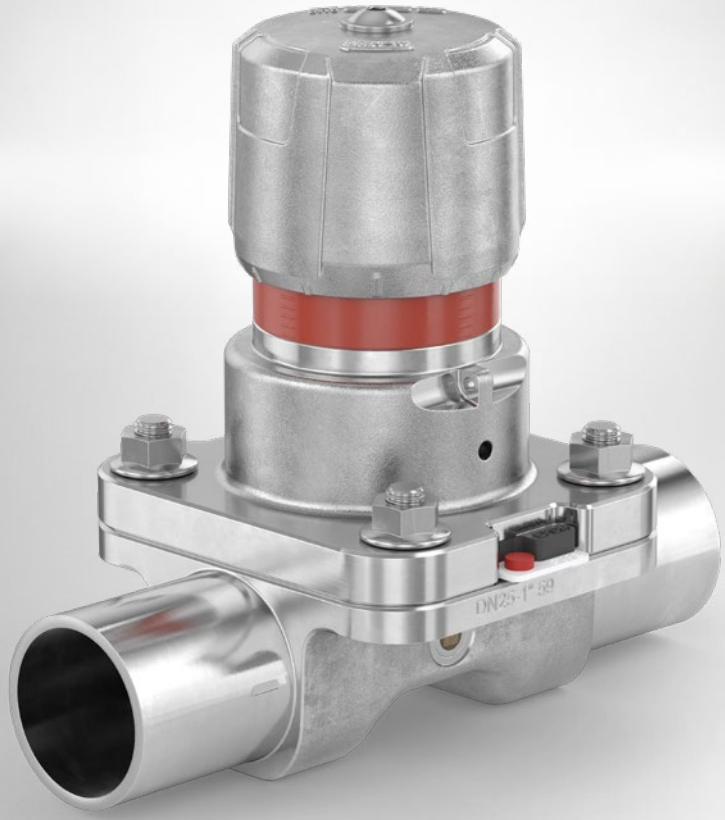

NEW

GEMÜ D20

Manual 2/2-way diaphragm valve made of stainless steel

Reliable manual valve with chambered diaphragm and a sealed handwheel

gemu-group.com

HYGIENIC. EASY. COMPACT. EFFECTIVE.

Reliable manual valve with chambered diaphragm and a sealed handwheel

The manually operated GEMÜ D20 diaphragm valve is designed for use in sterile applications. The diaphragm hermetically seals the actuator off from the working medium. Thanks to its sealed handwheel, the GEMÜ D20 is particularly suitable for autoclaving. All actuator parts (with the exception of the sealing and design elements) are made of stainless steel.

GEMÜ D20

Manual diaphragm valve

More information online

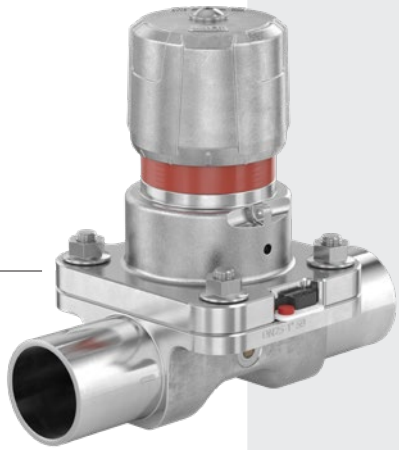

Easy and fast maintenance
Fast, safe and simple diaphragm and actuator mounting:
Reduces maintenance time, lowers costs, and prevents installation errors

New diaphragm technology
Low-maintenance due to the firmly chambered diaphragm:
Extends maintenance cycles and improves control accuracy

Optimized body design
Very high Kv values due to weight- and flow-optimized valve body:
Reduces energy demands, protects media, and boosts performance

Highest hygiene standards
Hermetically sealed handwheel compliant:
Minimizes the risk of contamination and qualifies the valve for the most demanding processes

Application areas
- Pharmacy & biotechnology
- Food & beverage

Pneumatic diaphragm valves of the new product generation

GEMÜ D40

Powerful diaphragm valve with chambered diaphragm

More information online



GEMÜ D41

Powerful diaphragm valve with EasyLock technology

More information online



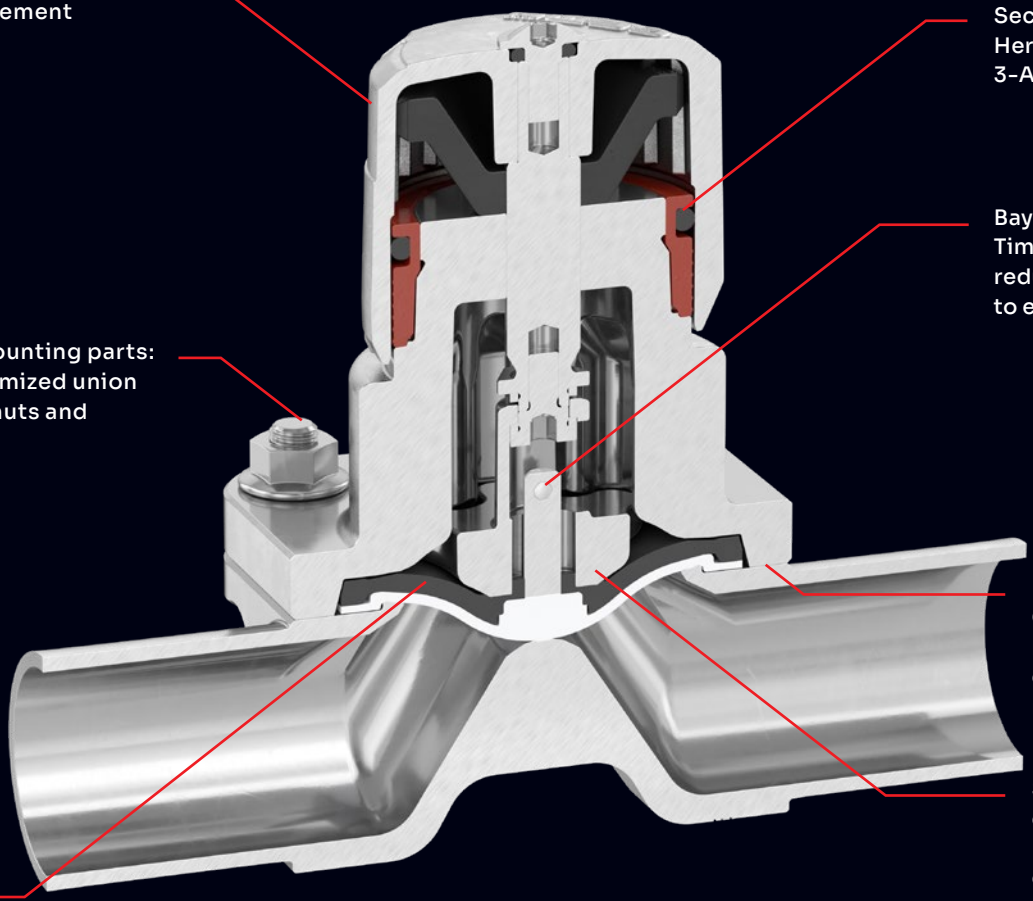

GEMÜ D20

With its hermetically sealed handwheel and chambered diaphragm, GEMÜ D20 meets the most stringent hygiene requirements – ensuring process reliability and low maintenance.



Your reliable partner for the future!

Our experts are here for you in person, locally, and online. Together, we'll quickly and effectively develop the best solution for your challenge.

info@gemue.de

GEMÜ Gebr. Müller
Apparatebau GmbH & Co. KG
Gert-Müller-Platz 1
74635 Kupferzell
Germany
Phone: +49 7940 123 0

Subject to alteration | 11/2026